Farm Energy IQ

Farms Today Securing Our Energy Future

Farm Energy Efficiency Principles

Tom Manning, New Jersey Agricultural Experiment Station

NORTHEAST SARE
Sustainable Agriculture Research & Education

Farm Energy Efficiency Principles

Tom Manning, New Jersey Agricultural Experiment Station, Rutgers University

Is my farm energy-efficient?

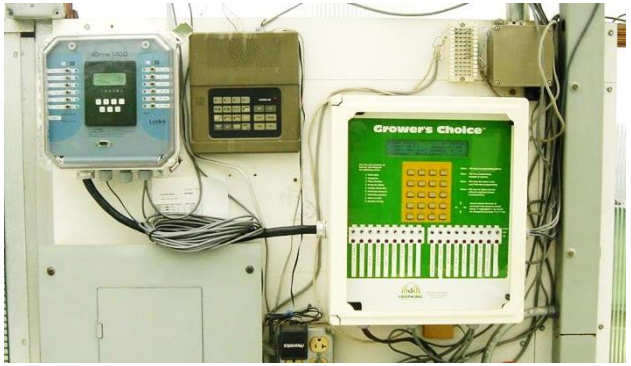

- How much energy do I use?
  - Review utility bills
  - Have an energy audit performed
  - Benchmark usage (Energy Utilization Indices)
- Are my controls effective?
  - Make sure sensors are clean and calibrated
  - Temperature sensors should be shaded and aspirated
  - Consider computerized controls

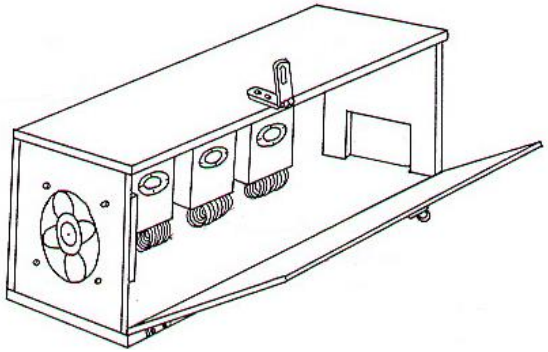

- Size equipment and structures appropriately
  - Match tractors to implements and application
  - Use cooling and refrigeration equipment that is properly sized

Other Approaches to Energy Efficiency

- Optimize production
- Insulate
- Use efficient technologies
- Maintain equipment and facilities
- Use efficient architecture and site facilities to reduce energy use

Common Fuels and Energy Sources

- Electricity
- Oil/gasoline
- Natural gas
- Propane (LPG)
- Wood/biomass
- Waste
- Photovoltaic (electricity from solar)
- Wind (electricity from wind turbines)

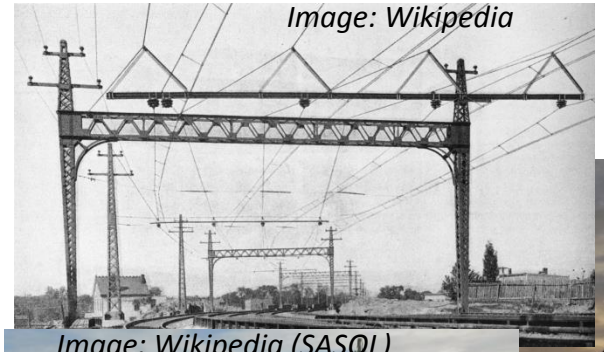
Image: Wikipedia


Image: Wikipedia (SASOL)


Image: Wikipedia


Image: Wikipedia (DeMeo)


Image: Wikipedia


Image: DOE


Image: NREL (Dennis Shroeder)

Uses of Energy

- Heat
  - Space heating
  - Process heat
  - Water heating
  - Cooking
- Work
  - Transportation
  - Material handling
- Cooling/refrigeration
- Lighting
- Appliances and electronics

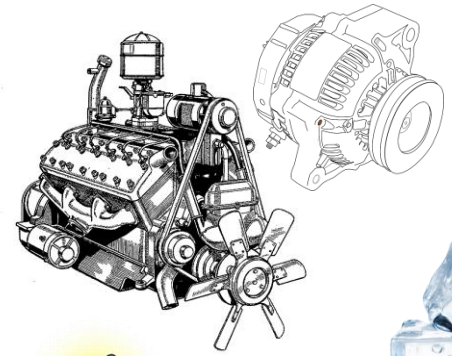

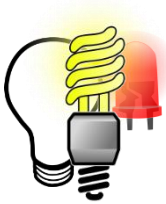

What do we mean by efficiency?

- Generally, a task performed with minimal expenditure (of time, effort, energy, etc.)
- The ratio of the useful energy output to the source energy used (input)
- All conversion processes have maximum theoretical efficiencies less than 100% (Second Law of Thermodynamics)
- Many technologies are near or at their maximum theoretical efficiencies

Efficiency Standards

- AFUE (Annual Fuel Utilization Efficiency) – Estimated amount of heat delivered to the conditioned space during the year divided by the total energy content of the fuel used by furnace or boiler
- HSPF (Heating Seasonal Performance Factor) – Estimated amount of a heat pump's seasonal output in BTUs divided by the total electrical energy consumed in watt-hours
- SEER (Seasonal Energy Efficiency Ratio) – Amount of cooling energy delivered during the season in BTUs divided by the total electric energy consumed in watt-hours

Examples of Energy Conversion Efficiency

Conversion process	Energy efficiency
Electric heaters	~100% (essentially all energy is converted into heat)
Electric motors	70–99.99% (above 200W); 30–60% (small ones < 10W)
Water turbine	up to 90% (practically achieved, large scale)
Electrolysis of water	50–70% (80–94% theoretical maximum)
Wind turbine	up to 59% (theoretical limit – typically 30 – 40%)
Fuel cell	40 – 60%, up to 85%
Gas turbine	up to 40%
Household refrigerators	low-end systems ~ 20%; high end systems ~ 40–50%
Solar cell	6–40% (15-20% currently)
Combustion engine	10–50% (*gasoline engine 15 – 25%)*
Lights	0.7–22.0%, up to 35% theoretical maximum for LEDs
Photosynthesis	up to 6%

Source: *Wikipedia*

Typical Light Conversion Efficiencies

Lighting Technology	Energy Efficiency	Lumens per Watt
Low-pressure sodium lamps	15.0-29.0%	100-200
High-pressure sodium lamps	12.0–22.0%	85-150
Light-emitting diode (LED)	4.2–14.9%, up to 35%	28-100
Metal halide lamps	9.5–17.0%	65-115
Fluorescent lamps	8.0–15.6%	46-100
Incandescent light bulb	0.7–5.1% (2.0-3.5% typical)	14-24 (typical)

Luminous efficiency (lumens per watt) is the light's luminous output expressed in lumens divided by the input power in watts.

Note: Many light sources (fluorescent, metal halide, and high pressure sodium) lose light output over time. This "lumen depreciation" is why new technologies, such as LEDs, can produce similar light at much lower wattages than existing light sources.

Source: *Wikipedia*

Heating Equipment Efficiencies

Heating Energy Source	Energy Efficiency
Electric*	95 – 100%
Natural Gas or Propane	65 – 95%
Oil	70 – 95%
Coal	70 – 80%
Biomass	65 – 90%
Wood	0 – 80%

**Although electric heating is close to 100% efficient, the production of electricity is only about 33% efficient*

How do we become more efficient?

- Reduce losses
  - Minimize leakage
  - Reduce friction
  - Improve heat transmission
- Design to meet the needs of the operation
- Use efficient equipment
- Improve conversion processes
- Use existing resources
- Reduce loads
- Add storage and level loads
- Increase heat transfer capacity

Reducing Losses - Friction

- 1/3 of a car's fuel consumption is spent overcoming friction
- Improved lubricants
- Design rolling elements to reduce rolling resistance
- Regular maintenance (e.g., tightening fan belts)
- Select materials for pipe and ductwork that minimize friction
- Design plumbing and heating systems to minimize length of runs and direction changes

Reducing Losses – Improved Heat Transmission

- Increase insulation
- Reduce surface area of the structure (outside walls and roof) relative to the production area or volume
- Reduce heat transfer properties of construction materials
- Reduce infiltration losses
- Use materials with appropriate radiative properties (low-e glass for windows)

Reducing Losses – Improved Heat Transmission

- Increase insulation
- Reduce surface area relative to production area or volume
- Reduce overall heat transfer properties
- Reduce infiltration losses
- Use materials with appropriate radiative properties

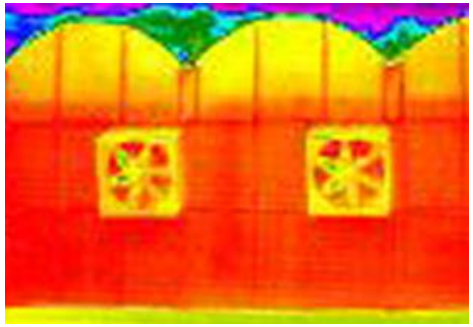

Photo credits: A.J. Both

Design to Requirements

- Match equipment to the task
- Don’t oversize heating and cooling systems
- Consider undersizing backup and secondary power sources
- Don’t build space that you won’t use

Energy Implications of Greenhouse Construction

Photos: A.J. Both

Increase Heat Transfer Capacity

- Condensing boilers and furnaces
- Energy recovery and preheat systems
- On-demand water heaters

Using Efficient Equipment

- High efficiency lighting
  - LEDs, fluorescent, HID
- Condensing boilers and heaters (90-98% efficient)
  - Operate on demand with no standby losses
  - Small footprint and low mass
  - Rapid response and quick heat delivery
- Variable frequency drive (VFD) motor controls
- High efficiency refrigeration and cooling equipment
  - SEER > 13 for central air conditioning
  - DOE standards for commercial refrigeration equipment

Reducing Loads

- Optimize space utilization (for example, greenhouse benching layout)
- Adjust temperatures
- Lower illumination levels
- Turn equipment and lights off or down when not in use
- Adjust schedules

Using Existing Local Resources

- Ventilation and evaporative cooling versus air conditioning
- Using economizer cycles for air conditioning
- Ground source heating and cooling
- Take advantage of site characteristics
  - Wind breaks
  - Daylighting

Other Opportunities…

- Understand the energy issues
- Energy storage
- Improved conversion processes
- Better controls

5,000 kW_{th} biomass boiler (efficient combustion made possible by new designs and advanced electronic controls)

Photo credit: A.J. Both

Renewables and Alternatives

- Always improve efficiency first
- Check that any new source of energy is suited for your specific location and conditions
- Understand the performance potential of energy technologies without incentives

Summary

- Efficiency is a concern at every step of the processes of converting and using energy
- Overall performance depends on the specifics of the situation and processes. Optimum efficiency depends on matching the energy source to the end use and using the appropriate processes.
- Make the best use of what you already have
- The most efficient device may be the one that is switched off

Farm Energy Efficiency Principles

Questions?